HOGAR

PRIMA
ONE TOUCH
DIMMER

PRIMA ONE TOUCH DIMMER INSTALLATION GUIDE

TABLE OF CONTENTS

1. USAGE NOTICE 3
   1.1. Warnings and Considerations: 3
   1.2. Precautions: 3
2. GETTING STARTED 4
   2.1. Purpose of the Manual: 4
   2.2. About the Product: 4
   2.3. Features: 4
   2.4. Device Functionality: 4
3. DEVICE INFORMATION 4
   3.1. Model No: 4
   3.2. Description: 5
   3.3. Box Contents: 5
4. DEVICE SUMMARY 5
   4.1. Technical Specifications: 5
5. INSTALLATION 5
   5.1. Pre-Installation Instructions: 5
   5.2. Installation Procedure: 6
   5.3. Operation and Configuration: 8
6. OVERVIEW OF Z-WAVE 8
   6.1. About Z-Wave: 8
   6.2. Including a Touch dimmer to Z-Wave Network: 8
   6.3. Excluding the touch dimmer from the Network: 8
   6.4. Resetting a Switch to the Factory State: 8
   6.5. Adjusting the Backlight Intensity: 9
7. WARRANTY 9
8. APPENDIX 10
   8.1. Troubleshooting: 10
   8.2. Technical Support: 10
   8.3. Regulatory/Safety Information: 10
9. COPYRIGHT STATEMENT 10
   9.1. Copyright Notice: 10
   9.2. Disclaimer: 10
   9.3. About this Document: 11

1. USAGE NOTICE

1.1. Warnings and Considerations:

The notices highlighted in the manual by caution symbols are as follows,

- ⚠ Indicates the higher level of severity; personal injuries may occur if the proper precautions are not taken.
- ✔ Indicates the instructions those need to be followed during the installation.
- ✔ Indicates suggestions and tips.

Please follow the notices in order to ensure your safety as well as to prevent property loss.

- ⚠ Turn **OFF** the electrical power before installing or servicing this product. Improper use or installation of can cause SERIOUS INJURY, DEATH or LOSS/DAMAGE OF PROPERTY.
- ⚠ Use a circuit breaker to protect this device.
- ⚠ Refer to the diagram presented in the manual and connect accordingly. Improper connections may be dangerous and can cause injuries.
- ✔ This device must be installed by an authorized electrician by following all the national and local electrical codes.
- ✔ An authorized electrician must install this device by following all the national and local electrical codes.
- ✔ Using this product in any manner other than referred to in this document voids your warranty. Further, Hogar Controls is NOT liable for any damage incurred with the misuse of the product.
- ✔ Do NOT use an electric screwdriver to install this device, doing that might over tighten the screws and strip them which may interfere with the proper switch operation.
- ✔ This is an electronic device with complex components. Handle and install with care!

1.2. Precautions:

Follow all the recommendations, warnings, and instructions for the smooth and more extended maintenance of the product.

Do's:

- ◣ Turn **OFF** the product before cleaning.
- ◣ Clean the surface of the glass panel using a soft damp cloth.

Don'ts:

- ◣ Do not paint the Touch Panel or its wall plate.
- ◣ Do not touch the surface of the screen with sharp or hard objects.
- ◣ Do not use abrasive cleaners, waxes or solvents for cleaning the Touch Panel.
- ◣ Do not operate the product under the following conditions:
  - Sweltering, cold or humid environment.
  - Areas are open to excessive dust and dirt.
  - Near any device producing a strong magnetic field.

- Areas where the device is exposed to direct sunlight.

2. GETTING STARTED

2.1. Purpose of the Manual:

Thank you for choosing the Hogar Controls family of products. This manual describes the Hogar Controls Touch Panels, their specifications, including components, functionality, safety instructions, and provides you with valuable information for the initial installation, setup, and connectivity. This manual will guide the user with the installation process, wiring, and usage of the product. This user manual/installation guide contains useful information for the person who installs the Prima Touch Panel, accessories, and the person who programs it.

2.2. About the Product:

The Hogar One Touch Smart Dimmer allows you to schedule, control and adjust the brightness of Incandescent bulbs and phase-cut dimmable LED lights. The module provides the best-in-class smooth dimming output for LED loads.

2.3. Features:

- The Programmable touch button that is used for dimming.
- Two-minute installation with no additional wiring.
- 1mW of radio signal power.
- Power consumption which is less than <0.5W.
- Radio frequency range - EU 868.4MHz, IN 865.2MHz, BR/AU 921.4MHz.

2.4. Device Functionality:

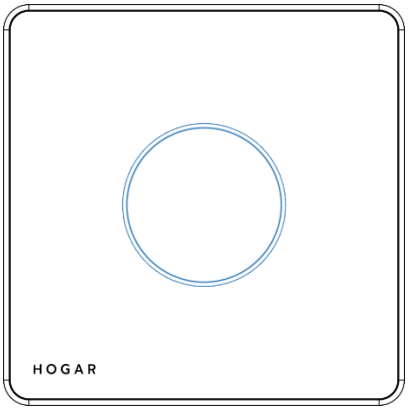

One-Touch Dimmer

The one-Touch dimmer is a switch operated by touch, rotate or through remote access. The device fulfills the basic requirement as switching ON/OFF and dimming the light in a room.

3. DEVICE INFORMATION

3.1. Model No:

HTP-1SD-XXX-IN

NOTE:

XXX- denotes the color of glass and metal brim

3.2. Description:

The Hogar Controls Touch dimmer operates independently or as a part of Hogar Controls home automation system or with any certified Z-Wave home automation system. It can be installed on a 2 modular British Standard (varies according to the region) 2 gang box.

3.3. Box Contents:

1 Touch dimmer

User guide

4. DEVICE SUMMARY

4.1. Technical Specifications:

1 TOUCH DIMMER	
Model number	HTP-1SD-XXX-IN
Power requirement	AC 110-240V, 50-60Hz.
Power Consumption Standby	<0.5W
Dimensions	
Dimensions	95x95x31.5mm
Load Rating	"300W Resistive (Incandescent Bulbs), 150W Capacitive (LED Lights)"
Weight	155g
Environmental	
Operating Temperature	32 °F - 122 °F or 0 °C - 50 °C
Humidity	0-90%
Storage	-4 °F to 158 °F or 20 °C to 70 °C
Wireless specifications	
Wireless range	100m outdoor - 30m indoor
Radio protocol	Z-Wave Plus
Radio signal power	1mW
Radio Frequency	EU 868.4MHz, IN 865.2MHz, BR/AU 921.4MHz. US 908 MHz

5. INSTALLATION

5.1. Pre-Installation Instructions:

Please refer the following **notes** during installation:

Note 1: Before you start installing, read all the installation instructions carefully.

Note 2: Keep the power OFF during the installation.

Note 3: The backbox wiring shown in this document is an example. Your wire colors and functions may differ. If you are not sure which wires are the Line In/Hot, Neutral, Load, and Earth Ground wires, please consult a trained electrician to perform the installation.

Note 4: Ensure that the location and product meet the following criteria:

- The load capacity matches the exact requirements of the Touch dimmer. Refer the load ratings in the specifications above for details.
- Install by following all the national and local electrical codes.
- The range and performance of the wireless control system are highly dependent on the following:
  - Distance between the devices;
  - The layout of the home;
  - Walls separating devices;
  - Electrical equipment located near devices.

Note 5: Note 5: The product operates with 110V-230VAC/50-60Hz, and it is necessary to connect proper "live" wire and the "neutral" wire for a valid installation.

Note 6: The maximum load for each channel is 1000W Resistive (Incandescent Bulbs), 150W Capacitive (LED Lights).

Note 7: The Touch dimmer is designed to operate in a wall switch box of dimensions L=95mm B=95mm H= 31.5mm

Note 8: The Touch dimmer is intended to be installed by a qualified electrician. Improper installation may cause malfunction.

5.2. Installation Procedure:

Connect as per the following steps:

Step 1: Gather the tools required to install the device:

- Suitable screwdriver for twisting and turning screws
- Pliers for stripping wires
- Insulation Tape or Lugs for insulation

Step 2: Turn **OFF** the power.

Step 3: Remove the faceplate or old switchboard (if any) by unscrewing it from the wall.

Step 4: Strip all the wires to the appropriate length, i.e., 5/8th of an inch from the wire end.

Step 5: Open the frame of the Touch dimmer using a tool as shown below.

Step 6: Connect the wires to the appropriate terminals as per the diagram below. Make sure the wires are properly screwed to avoid loose connections.

Wiring Diagram

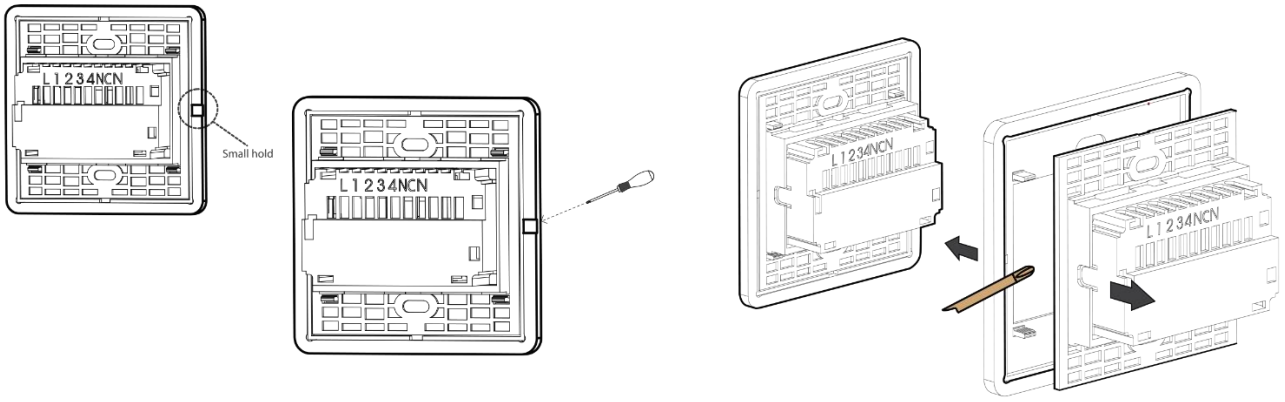

1 Touch Dimmer Connection

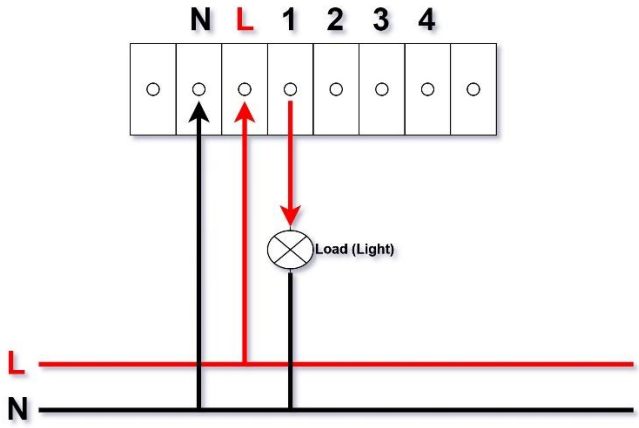

- L – Terminal for live lead
- N – Terminal for neutral lead
- 1 is output terminal for load

TIP: If you are using a Hogar Controls push-on (screwless) faceplate in a multi-gang installation, attach the back of the faceplate, i.e. a sub-plate to all the devices that should be installed into the wall box before attaching the Touch dimmer into the wall box. This helps to ensure that all the devices are properly aligned on the same plane after installation.

Step 7: Fit the wires back into the backbox by adjusting them in a zigzag pattern so that they can easily fold into the back box.

Step 8: Fix the Touch dimmer to the backbox and fasten it with screws. Tighten the screws until the backside of the yoke plate is even with the wall surface, make sure that they are not overtightened.

Step 9: Mount the glass frame to the wall box. To avoid any damage to the glass frame faceplate, please take care while applying the force to the Touch dimmer.

Step 10: Turn ON the power. On Initial power up, the LEDs on the Touch dimmer blinks and come to stable blue. This indicates the device booted up and is ready for use.

5.3. Operation and Configuration:

When the power is supplied, the status LEDs on the touch panel blinks four times and turns to a constant blue indicating the device is **ON** and ready to use.

LED Color indication: **Red** LED is for **ON** state, and **Blue** LED for **OFF** state.

- Single tap - ON/OFF
- Swipe Clockwise - Increases Dimming
- Swipe Anticlockwise- Decreases dimming

6. OVERVIEW OF Z-WAVE

6.1. About Z-Wave:

- Z-Wave is the leading wireless mesh networking protocol used in smart home technology around the world. It is used in millions of products which does not interfere with the Wi-Fi signal and operates on low power.
- Z-Wave protocol is used in the products which are used every day as lights, locks, switches and make them smart - give them the ability to connect and communicate with each other which enable the user to control the devices within the home or from anywhere around the world.
- Z-Wave operates wirelessly and securely. The devices can be easily accessed and managed remotely on the smartphone, tablet or computer, so the smart home can be controlled the smart home from anywhere in the world!

6.2. Including a Touch dimmer to Z-Wave Network:

Step 1: Keep the device within Z-Wave range and set the Home Controller in Inclusion/Add mode to Add (refer to the Controller manual).

Step 2: Touch and Hold switch for 5 seconds until all the LEDs blink in blue color and then release when the controller displays the following message – "device found."

Step 3: Wait until all the switches are added and updated.

Step 4: Rename the Touch switches as per the requirement, assign to the desired room and save it (refer to the controller manual).

6.3. Excluding the touch dimmer from the Network:

Step 1: Keep the device within the Z-Wave range and set the Home Controller in Remove/Exclusion mode to delete (refer to the Controller manual).

Step 2: Touch and Hold switch for 5 seconds until all the LEDs blink in blue color and then release when the controller displays the following message – "device removed.".

6.4. Resetting a Switch to the Factory State:

Press the Config button continuously five times, and all LEDs blink in RED color three times which indicates a Factory reset.

6.5. Adjusting the Backlight Intensity:

Click on the config button continuously for 15 seconds to adjust (increase or decrease) the backlight intensity to either 80% or 30%.

7. WARRANTY

- Hogar offers a One-Year limited warranty on any product which covers defects in materials and quality under regular use of the Product (the "Warranty Period").
- The Terms and Conditions of this One-Year limited warranty are as follows:
- If Hogar receives a valid claim within the applicable Warranty Period, Hogar will either repair or exchange the product with a new one.
- As declared above, this one-year warranty incorporates defects in materials and quality only under regular use. It does not cover the cost of insulation, installation, extraction or reinstallation, and does not apply to (a) damage occurs of normal wear and tear; (b) loss caused by pairing with non-Hogar products; (c) damage caused by collision, abuse, misapplication, or external factors; (d) discontinuance of technology; (e) damage caused by operating the product outside the intended practices outlined by Hogar ; (f) damage caused by third-party service providers; or (g) a product, or any part thereof, that has been changed outside its suitable detailed parameters without the prior written consent from Hogar.
- Warranty will be void if the product seal is broken, the product is burnt or physically damaged.
- To claim the warranty, a copy of the dated sales receipt of this product is mandatory.
- To file for a warranty claim, please provide the photographs of the product showcasing the different angles, this would help us in conducting a proper evaluation of your warranty claim. Also, write a summary explaining how the damage happened to the product, along with your phone number and complete shipping address.
- To send a claim via email, contact us at asia.support@hogarcontrols.com. Please write your claim summary in the body of the email and attach digital photographs and a scanned image of your dated sales receipt.
- **HOGAR IS NOT RESPONSIBLE FOR DIRECT, SPECIAL, ACCIDENTAL OR CONSEQUENTIAL DAMAGES RESULTING FROM ANY VIOLATION OF WARRANTY OR STATE, OR UNDER ANY OTHER LEGAL THEORY, INCLUDING BUT NOT LIMITED TO LOSS OF USE; LOSS OF RESOURCES; LOSS OF ACTUAL OR EXPECTED PROFITS (INCLUDING DAMAGE OF PROFITS ON CONTRACTS); LOSS OF THE USE OF MONEY AND ANTICIPATED SAVINGS; LOSS OF BUSINESS; LOSS OF OPPORTUNITY; LOSS OF GOODWILL AND REPUTATION; LOSS OF, DAMAGE TO, OR EXPLOITATION OF DATA; OR ANY INDIRECT OR SIGNIFICANT LOSS OR DAMAGE HOWEVER CAUSED INCLUDING THE REPLACEMENT OF EQUIPMENT AND PROPERTY. CERTAIN PARTS & ACCESSORIES LIKE GLASS & ADAPTERS IS EXCLUDED FROM WARRANTY.**
- Some states do not permit the exclusions or limitations of incidental or consequential damages, so the above constraints may not apply to those regions. This warranty gives specific legal rights and may also have other rights that vary from state to state.

8. APPENDIX

8.1. Troubleshooting:

If the light does not illuminate automatically, please make sure that:

- The light bulb is not screwed in so tightly and burned out.
- There should be one LED illuminating on the face of a Touch dimmer.
- The circuit breaker is not switched OFF or staggered.
- The Wiring connections are right according to the sample diagram provided in the manual.

For any assistance needed on the Installation or operation of this product, write to us or call the Hogar Controls Technical Support Centre. Please provide your exact model number. Contact us or visit the website www.hogarcontrols.com.

8.2. Technical Support:

We strive to make our products, manuals best in the industry. We always rely on the user's feedback to let us know if we are reaching our goal and expectations. Also, this would help us in doing better in every aspect. If you have any queries or couldn't find a solution to any application, or for technical assistance, please mail us at asia.support@hogarcontrols.com. Our technical support group will be available round the clock and work with you to clarify your queries.

You can also visit our web site https://www.hogarcontrols.com/ where you can find technical and non-technical information about the Hogar Controls and products. If you have a comment, inquiry or advice about any of our products, services, or manuals, please reach us out on the numbers provided on the website or in the manual.

8.3. Regulatory/Safety Information:

To review the regulatory information for your Hogar Controls products, look out for the information on the Hogar Controls website at http://www.hogarcontrols.com/.

9. COPYRIGHT STATEMENT

9.1. Copyright Notice:

The user manual, including the content, wiring diagrams, images, the logo is protected by the Hogar Controls, Inc., the United States, and other countries. Copyright©2019, all rights reserved. Any practice of copying this content or images or any form is not allowed without the written consent of the manufacturer. Google Assistant and Alexa logos are trademarks or registered trademarks of Google LLC and Amazon.com, Inc. or its affiliates, respectively.

9.2. Disclaimer:

All the other names and brands may be claimed as the qualities of their respective owners. The specifications are subjected to change without any prior or post notice. The manufacturer does not provide any assurance or guarantee regarding the contents in the manual and explicitly mentioned the intended warranties of merchantability and fitness for a particular

purpose. The manufacturer possesses all the rights to modify the publication and change the contents of the materials at any time without any notice to any person.

9.3. About this Document:

The manual applies to the end-user and describes the installation and usage. We strived to put all the relevant information on the same page. The format, easy for printing, is convenient for reading and paper-saving, which is beneficial to environmental protection. It is suggested printing the page you need.

HEADQUARTERS: 46040 Center Oak Plaza Suite125 Sterling VA 20166, USA
INDIA: Plot No.3, IDA Uppal, Uppal, Hyderabad, Telangana 500039, India
For inquiries, please contact leads@hogarcontrols.com
©Copyright 2019 Hogar., All rights reserved.